OWNER'S MANUAL

MODEL NO.
18201620840

- **Assembly**
- **Adjustments**
- **Parts**
- **Warranty**

CAUTION

You must read and understand this owner's manual before operating unit.

TRAINOR SPORTS

MY FIRST JUMP N SWING

my 1st jumpnswing

MY FIRST JUMP N SWING

DANGER

- DO NOT attempt somersaults or flips. Paralysis or death can result if you land on your head or neck!
- No more than one person on the trampoline at a time. Multiple users increase the risk of injury.
- On-site adult supervision is required at all times for children of all ages.

WARNING

- This product is intended for use by children from 3 to 10 years old.
- This product is designed for use by up to 2 children at one time. Maximum weight of each user shall not exceed 100lbs (45kg) with a combined maximum weight of 200lbs (90kg).
- These instructions are for your safety. Please read each of them thoroughly before you assemble and use this trampoline. Retain this manual for future reference.

⚠ DANGER

NO SOMERSAULTS OR FLIPS — PARALYSIS OR DEATH CAN RESULT IF YOU LAND ON YOUR HEAD OR NECK!

NO MORE THAN ONE USER AT A TIME ON THE TRAMPOLINE OR SWING (MAXIMUM WEIGHT-100LBS/45KG).

DO NOT USE IF IN A CAST OR HAVE REVIOUS LEG, ARM, HEAD, NECK OR BACK INJURY.

DO NOT ALLOW CHILDREN LESS THAN THREE (3) YEARS OF AGE TO USE.
THIS PRODUCT IS INTENDED FOR USE BY CHILDREN FROM 3 TO 10 YEARS OLD.

REMOVE ALL HARD OR SHARP OBJECTS INCLUDING JEWELRY, EYEGLASSES, SUNGLASSES OR HAIRCLIPS BEFORE JUMPING.

DAILY PREINSPECTION:

>Inspect legs for proper attachment or cracks
>Inspect netting for tears and sagging
>Inspect for loose or damaged springs
>Inspect mat for tears or worn stitching
>Inspect frame for sagging or cracks

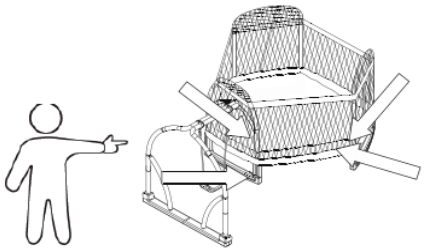

INSPECT PRIOR TO USE — CHECK THAT THE LEGS ARE PROPERLY ATTACHED; NO LOOSE SPRINGS; MAT AND SAFETY NET ARE IN PROPER PLACE AND IN GOOD CONDITION WITH NO TEARS.

INTRODUCTION

Thank you for purchasing a Trainor Sports product! This trampoline and swing set was designed and manufactured with quality materials and craftsmanship, providing fun and exercise in the enjoyment of your own backyard.

It is very important that the owners and users of this trampoline and swing set have adequate knowledge of techniques and rules for proper use. In particular, children must be supervised at all times by a knowledgeable and mature adult while using the trampoline and swing set. Take precautions to prevent access to the trampoline swing set by children when there is no adult supervision. Also restrict access to any unauthorized users without your consent.

Carefully read and understand all of the instructions and warnings in the User Manual before assembling and using this product. It is the responsibility of the owner of this trampoline and swing set to ensure that all users of this product are fully informed on the proper use and the inherent risks of playing on a trampoline and swing set. Failure to do so can result in serious injury or death. In particular, under no circumstances should you attempt or allow flips, somersaults or any similar conduct. Landing on the head or neck can cause serious injury, paralysis, or death, even when landing in the middle of the mat. Also, do not allow more than one person on the trampoline or swing under any circumstances. Use by more than one person on the trampoline at the same time increases the chance of injury.

To reduce risks associated with users falling off the trampoline and swing set, enclosure netting must be properly installed and used at all times. The trampoline enclosure must be closed during use to prevent the user from falling off the trampoline. Your trampoline enclosure netting is manufactured with UV resistant material. Despite this, exposure to harsh elements (sunlight, wind, moisture, animals, etc) will weaken the netting. The netting and mat must be inspected prior to every use and maintained regularly as detailed in this User's Manual.

Please also ensure proper placement of this product to avoid injuries. It is essential that the intended site for this trampoline and swing set is completely flat and level. If the ground is uneven, this could cause movement in the frame and stress on the joined sections of the frame that could damage the trampoline and/or can cause serious injury. Do not position this trampoline and swing set on hard surface such as concrete, tarmac or paving. Suitable surfaces include flat dirt or grass, sand or play area covered with an appropriate depth of play bark material, with no obstructions above, below or near the product.

The product must not be used in windy conditions as wind can cause unexpected movement of the product. Wind can cause the trampoline and swing set to be lifted off the ground and become airborne. This can present a danger to individuals and to property. Winds can be especially strong in open areas, foothills, mountains, locations subject to hurricanes and tornadoes, areas between homes that create wind tunnels and anywhere else where local weather conditions can create high winds. We recommend that you anchor the trampoline and swing set or otherwise secure the trampoline and swing set to prevent it from moving as a result of the wind. We recommend consulting a local licensed contractor to best determine how the anchor system should be constructed for your specific conditions. The licensed contractor can also advise you of other options such as below ground installation. Even with anchors, a trampoline can be lifted, just like anything else, by strong winds. If the winds are anticipated to be very strong, the trampoline should be disassembled and stored away safely until the weather conditions improve. Damage from the wind or other severe weather is not covered by the manufacturer's warranty. Because the manufacturer warranty does not cover wind or weather related damage and damage can be caused to your property or the property of others by a windblown trampoline, it is strongly advised that you provide site specific anchoring through a licensed local contractor.

TABLE OF CONTENTS

Before You Start to Assemble 5

Before Using the Product 6

Important Instructions for Enclosure Netting and Mat 10

Trampoline Parts List 12

Swing Parts List 13

Tools List 14

Hardware List 15

Installation of the Trampoline 16

Installation of the Swing 29

Proper Use Instructions 34

Learning the Fundamental trampoline skills 36

Product Warranty 38

DANGER

- Use equipment only with mature, knowledgeable adult supervision.
- Do not attempt or allow somersaults. Landing on the head or neck can cause serious injury, paralysis, or death, even when landing in the middle of the bed.
- Do not allow more than one person on the trampoline or swing. Use by more than one person on the trampoline at the same time increases the chance of injury.

IMPORTANT SAFETY INSTRUCTIONS

Carefully read these warnings before using this product. Failure to follow these safety instructions can result in serious injury or death.

Before you start to assemble…

- Check the package and make sure you have all of the parts listed in the Parts List section of this user manual. IF ANY PARTS ARE MISSING, please call the Customer Service toll-free number for assistance.
- Do not install or use the product if any parts are missing or damaged. Store in a safe place until ready to install.
- Make sure that you have plenty of space and a clean dry area suitable for the assembly of this trampoline and swing set. **IT IS ESSENTIAL THAT THE INTENDED SITE FOR THIS TRAMPOLINE AND SWING SET IS COMPLETELY FLAT AND LEVEL.** If the ground is uneven, this could cause movement in the frame and stress on the joined sections of the frame that could damage the trampoline and swing set and/or can cause serious injury.
- Two adults are needed to assemble this trampoline and swing set
- Heavy gloves must be used to protect your hands from pinch points during assembly and goggles must be worn to avoid injuries to the eyes.
- Never modify the construction or the design of the product. Do not use any manufacturer unauthorized parts with this trampoline and swing set.
- This pack may contain small parts and is not suitable for children to be nearby during assembly.
- **IMPORTANT:** Save this manual for future reference.

Before using the product…

- Use of this trampoline and swing set requires constant adult supervision. Use the equipment only with mature and knowledgeable **ADULT** supervision.
- Ensure that the trampoline enclosure has been assembled correctly, as per the instructions in this manual and that the zip and hook are fully attached before use.
- Recommended for use by children between 3-10 years of age.
- There must be no more than one person at a time on the trampoline or swing.
- Maximum weight of the user shall NOT exceed 100lbs/45kg with a combined maximum weight of 200lbs (90kg). This product is recommended for outdoor household and family domestic use only – It is not for use in schools, playgrounds, rental or commercial use.

⚠ DANGER

- Use equipment only with mature, knowledgeable adult supervision.
- Do not attempt or allow somersaults. Landing on the head or neck can cause serious injury, paralysis, or death, even when landing in the middle of the bed.
- Do not allow more than one person on the trampoline or swing. Use by more than one person on the trampoline at the same time increases the chance of injury.

IMPORTANT SAFETY INSTRUCTIONS

Carefully read these warnings before using this product. Failure to follow these safety instructions can result in serious injury or death.

⚠ DANGER

- Only one user at any one time on the trampoline or swing! Multiple users can cause loss of control, collision or falls. This could result in serious injury to legs, arms, back, neck or head.
- Always consult your physician before performing any kind of physical activity.
- Do not use the product if you have high blood pressure.
- Do not use the product if you have a medical history of neck or back Injuries or mental or physical conditions that could cause injury.
- Do not use if the user has any broken bones (casts) or has recently been in the hospital for extensive treatments (operations, severe wounds, stitches, back injury or concussion).
- Do not use the product during windy conditions or if the user or the product surface is wet. These conditions can cause the user to lose control and fall resulting in serious injury.

DANGER

- Use equipment only with mature, knowledgeable adult supervision.
- Do not attempt or allow somersaults. Landing on the head or neck can cause serious injury, paralysis, or death, even when landing in the middle of the bed.
- Do not allow more than one person on the trampoline or swing. Use by more than one person at the same time on the trampoline increases the chance of injury.

IMPORTANT SAFETY INSTRUCTIONS

Carefully read these warnings before using this product. Failure to follow these safety instructions can result in serious injury or death.

WARNING

Proper Play Conditions:

- Always use the product in a well-lit area. Do not use without lighting during dawn, dusk or in complete darkness!
- The product must be placed on a surface that is **COMPLETELY FLAT AND LEVEL**. If the ground is uneven, this could cause movement in the frame and could cause stress on the joined sections of the frame that could damage the trampoline and/or can cause serious injury.
- DO NOT install or position this product on a hard surface such as concrete, tarmac or paving. Suitable surfaces are grass, sand or a play area covered with an appropriate depth of play bark material.
- Maintain clear space on all sides of the product. Make sure that there are no hazardous objects above, below or near the trampoline. Such objects include walls, fences, tree limbs/trunks, electrical power wiring, rocks, sprinkler heads or other recreational objects (i.e. swing sets, swimming pools). Children can be seriously injured by colliding with such obstacles.
- Adequate overhead clearance is essential. A minimum of 24 ft (7.3 meters) from ground level is recommended. Provide clearance for wires, tree limbs, and other possible hazards.
- Do not use the product indoors, as this product is intended for outdoor home use only.
- The product must not be used in windy conditions as wind can cause unexpected movement of the product. Wind can cause the trampoline to be lifted off the ground and become airborne. This can present a danger to individuals and to property. Winds can be especially strong in open areas, foothills, mountains, locations subject to hurricanes and tornadoes, areas between homes that create wind tunnels and anywhere else where local weather conditions can create high winds. We recommend that you anchor the trampoline or otherwise secure the trampoline to prevent it from moving as a result of the wind. We recommend consulting a local licensed contractor to best determine how the anchor system should be constructed for your specific conditions. The licensed contractor can also advise you of other options such as below ground installation. Even with anchors, a trampoline can be lifted, just like anything else, by strong winds. If the winds are anticipated to be very strong, the trampoline should be disassembled and stored away safely until the weather conditions improve. Damage from the wind or other severe weather is not covered by the manufacturer's warranty.

DANGER

- Use equipment only with mature, knowledgeable adult supervision.
- Do not attempt or allow somersaults. Landing on the head or neck can cause serious injury, paralysis, or death, even when landing in the middle of the bed.
- Do not allow more than one person on the trampoline or swing. Use by more than one person at the same time on the trampoline increases the chance of injury.

IMPORTANT SAFETY INSTRUCTIONS

Carefully read these warnings before using this product. Failure to follow these safety instructions can result in serious injury or death.

WARNING

Appropriate Use Conditions:

- Children must always be supervised while they are playing on the equipment and must be instructed not to use the trampoline and swing set in an inappropriate or hazardous manner. Take precautions to prevent access to the product by children when there is no adult supervision.
- Restrict access to the product by any unauthorized users without your consent.
- Trampolines are rebounding devices, which propel the user to unaccustomed heights, and into a variety of body movements. Rebounding off of the trampoline, striking the frame or springs, or improperly landing on the trampoline mat may cause serious injury.
- Always start and maintain your jump at the center of the trampoline mat in order to reduce the risk of landing on the frame or springs or falling off the trampoline.
- Avoid bouncing too high. Stay low until you can control your bounce and land consistently in the middle of the trampoline mat.
- Ensure the trampoline frame and springs are fully covered by the frame pad to avoid any direct contact with metal parts.
- Do not stand or jump on the springs while using the trampoline. The springs are not designed to support such stress and weight. This can result in serious injuries and/or product damage. If you see any signs of stretched or damaged springs, do not use the trampoline until replacement springs are properly installed. Please contact our customer service representatives to order original manufacturer replacement parts.
- The trampoline is several feet off the ground. Jumping off the trampoline to the ground or any other surface may result in injury. Smaller children may need assistance getting up onto or down from the trampoline. Mounting and dismounting properly should be followed as a strict rule. Users should climb onto the trampoline by placing their hands on the frame and stepping or rolling up onto the frame, across the springs and onto the mat. Do not step directly on the frame pad or grasp the frame pad when mounting or dismounting the trampoline. To dismount, jumpers should walk to the side of the mat, bend over and place their hands on the frame, then step from the mat to the ground. Users should always place their hands on the frame while mounting or dismounting.
- Do NOT use the trampoline as a springboard to jump onto other objects.

- Remove all objects not designed for use with the trampoline from the trampoline before use. Do not let children take toys or other items onto the trampoline.
- Do not jump or step onto the frame pad as it was not designed to support the weight of a person.
- Do not use the trampoline while holding or wearing any type of sharp or pointed objects such as jewelry, watches, rings, eyewear and necklaces before using this product. This will prevent the jewelry from tearing the mat or getting caught in the enclosure netting.
- Do not wear loose fitting clothing that may catch or snag during play.
- Never wear footwear (e.g. shoes) when using the trampoline.
- Always tie back long hair so that it does not block user's vision or get caught in the enclosure netting.
- FRAME PADS – Frame pads are there to protect user from any fall or landing on the springs and frame. On no account should people be permitted to sit or stand on them when the trampoline is in use. You should also make sure that smaller users do not use the inside edges of the pads as a "handle" when getting up on to the trampoline.
- Never use the trampoline without the frame pad being securely attached. Properly tie down the frame pad before each use. Improper assembly of the frame pad may lead to injury!
- Always check to ensure there are no obstructions or objects under the trampoline that could cause injury or obstruct movement of jump mat. Also check that there are no pets or other people underneath the trampoline.
- Do not jump on the trampoline with a snowboard, skateboard, roller blades, bicycle or any other equipment. DO NOT hold any foreign objects not authorized by the manufacturer in your hand and DO NOT place any objects on the trampoline while anyone is jumping on it. Please be aware of your surroundings to ensure there are no objects that could cause harm when you are playing on the trampoline.
- The frame of your trampoline is made of steel and it will conduct electricity. No electrical equipment (lights, heaters, extension cords, household appliances, etc.) should be permitted in or on the enclosure under any circumstances to avoid the risk of electrocution.

Enclosure Netting and Mat – Appropriate Use Conditions

- Children MUST NEVER be left unattended inside the enclosure at any time.
- The enclosure is ONLY intended to be used to reduce the risk of injury from falling off the trampoline. Do not intentionally kick, bounce against, climb on, hang from, jump over or crawl under the netting.
- Enter and exit the enclosure only through the zipper door. Do not go through the gap between the netting and the mat. Trying to exit this way poses a risk of strangulation, especially for young children.
- The enclosure netting and mat must be inspected prior to each use. If there are any signs of weakness, you must stop using the trampoline immediately, properly store the trampoline and restrict access by users until authorized replacement netting or pad is installed. Please refer to the Trampoline Net & Pad – Maintenance Requirements section contained in this manual for further details.

Important Instructions for Enclosure Netting and Mat

Failure to follow these instructions to ensure proper operational condition of your trampoline may lead to serious injury or death.

1. **Maintenance of Trampoline Enclosure Net, Mat and Pad**

   Enclosure nets and padding are prone to wear and tear like tires on a car. Gradual deterioration of the material will occur; the speed of which will depend on the level of exposure to UV rays, airborne pollution and outdoor weather conditions such as rain and wind.

   The net and padding needs to be properly maintained and checked by following the Maintenance Schedule set out in these instructions. When the material shows any signs of weakness, you must stop using the trampoline immediately, properly store the trampoline and restrict access by users until a new replacement net or padding is properly installed.

   Official replacement nets and padding can be purchased by contacting our authorized customer service by toll free number or email us at: customerservice@dyaco.ca.

2. **Maintenance Requirement for Enclosure Net**

   Your trampoline enclosure netting is manufactured with UV resistant material. Despite this the netting is exposed to the outdoor elements including sunlight, wind, rain and wildlife. The net surrounding the trampoline must be checked prior to each use. This includes, but is not limited to inspecting the net for cracks, excess wear, brittleness, and stretching. Also inspect all connections and the entire enclosure for overall integrity. The net must be immediately replaced if it shows any signs of wear, damage, stretching, cracking, looseness, brittleness or other losses in integrity. The following Maintenance Schedule must be followed:

1 to 3 Months	3 to 6 Months	6 to 12 Months
Inspect the enclosure (net, net hanger, and straps) prior to every use.	Thorough inspection for UV damage and prior to every use for net, net hanger and straps.	Thorough inspection before every use on net, net hanger, straps, zippers, ties and strings. Replace after 12 months or earlier if necessary.

IT IS RECOMMENDED THAT THE NET BE REPLACED ON A YEARLY BASIS UNDER NORMAL USE, EVEN IF IT DOES NOT SHOW ANY VISIBLE SIGNS OF DAMAGE.

How to Inspect the Trampoline Net for Proper Use

Always check the enclosure netting for signs of UV damage, deterioration, brittleness, cracking, and tearing every time before using the trampoline and enclosure.

Step 1 - Inspect the enclosure netting before **EACH** use for wear or tear by pinching and pulling a section of the netting between fingers and pulling downward. Please see diagram below.

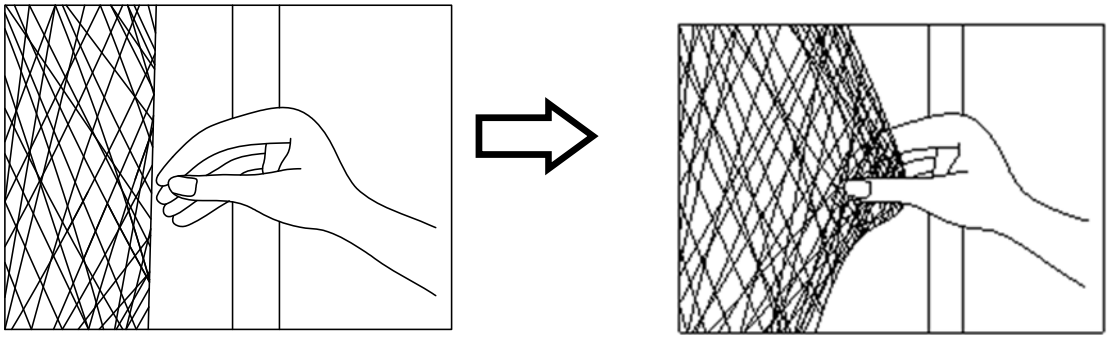

If it produces any tear or cracking or ripping sound, then the net is unsafe and MUST be taken down immediately. **STOP USING THE TRAMPOLINE ENCLOSURE IF YOU FIND ANY SIGNS OF WEAR OR TEARING ON THE NETTING.**

Step 2 - Walk around the whole perimeter of the trampoline to visually check for material deterioration or other damage.

1. Maintenance Requirement for Trampoline Pad

Walk around the whole perimeter of the trampoline to visually check for material deterioration, tears, looseness, loss of elasticity or other damage in the pad.

It is recommended that you replace the trampoline enclosure net and pad every 12 months. Replace the enclosure net and pad earlier if there are any signs of wear, tear, brittleness, cracking, stretching or any other signs of weakness. New enclosure netting and pad can be purchased through our authorized service center

TRAMMPOLINE PARTS (not actual size)

Key Number	Part Number	Part Picture	Quantity
1	82 HJ6208401	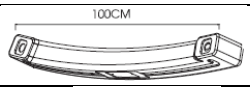	3
2	82 HJ6208402		6
3	82 HJ6208403		6
4	82 HJ6208404	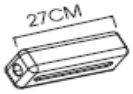	6
5	82 HJ6208405	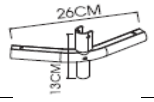	1
6	82 HJ6208406	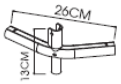	1
7	82 HJ6208407	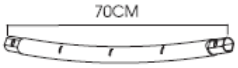	3
8	82 HJ6208408	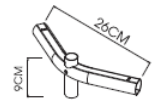	4
9	82 HJ6208409	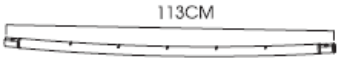	3
10	82 HJ6208410		36
11	82 HJ6208411		2
12A	82 HJ6208412A		1
12B	82 HJ6208412B		1
13	82 HJ6208413	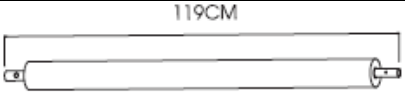	4
14	82 HJ6208414	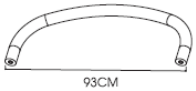	3
A			1
B			1

SWING PARTS (not actual size)

Key Number	Part Number	Part Picture	Quantity
15	82 HJ6208415	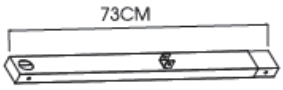	1
16	82 HJ6208416	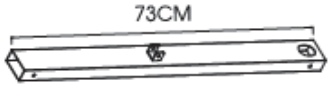	1
17	82 HJ6208417	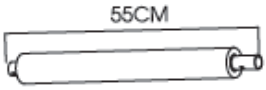	2
18	82 HJ6208418		2
19	82 HJ6208419	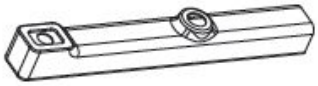	1
20	82 HJ6208420	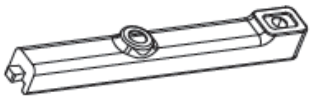	1
21	82 HJ6208421	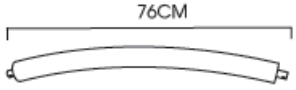	2
22	82 HJ6208422	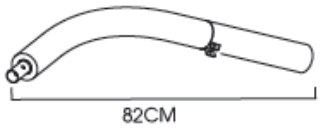	2
23	82 HJ6208423	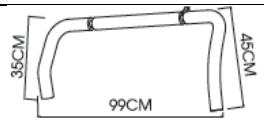	1
24	82 HJ6208424	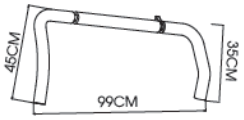	1
25	82 HJ6208425		1
26	82 HJ6208426		2

TOOLS (not actual size)

Key Number	Part Number	Part Picture	Description	Quantity
27	82 HJ6208427		Small Allen Wrench	2
28	82 HJ6208428		Big Allen Wrench	1
29	82 HJ6208428		Tool Wrenel	1
30	82 HJ6208430	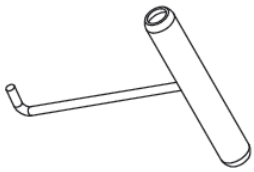	Spring Loading Tool	1

HARDWARE INCLUDED (shown actual size)

Key Number	Part Picture	Quantity
S1	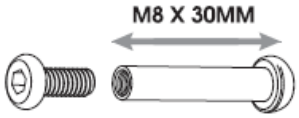	2
S2	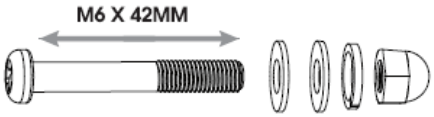	6
S3	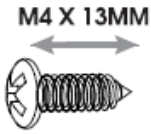	6
S4	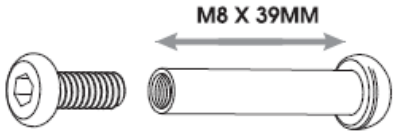	3
S5	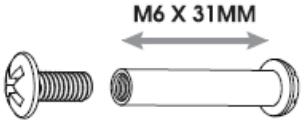	8
S6		8
S7	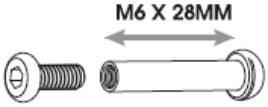	6
S8	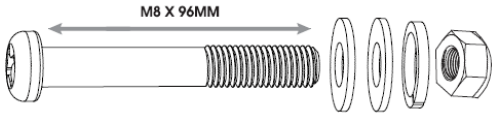	2
S9	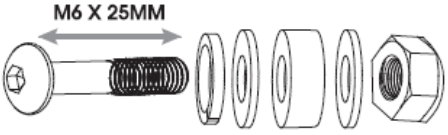	2

INSTALLATION OF TRAMPOLINE

STEP 1

Place the 3 Trampoline Leg Bases (No.1) flat on the ground in a circle approximately one meter apart from each other as shown in Figure 1.

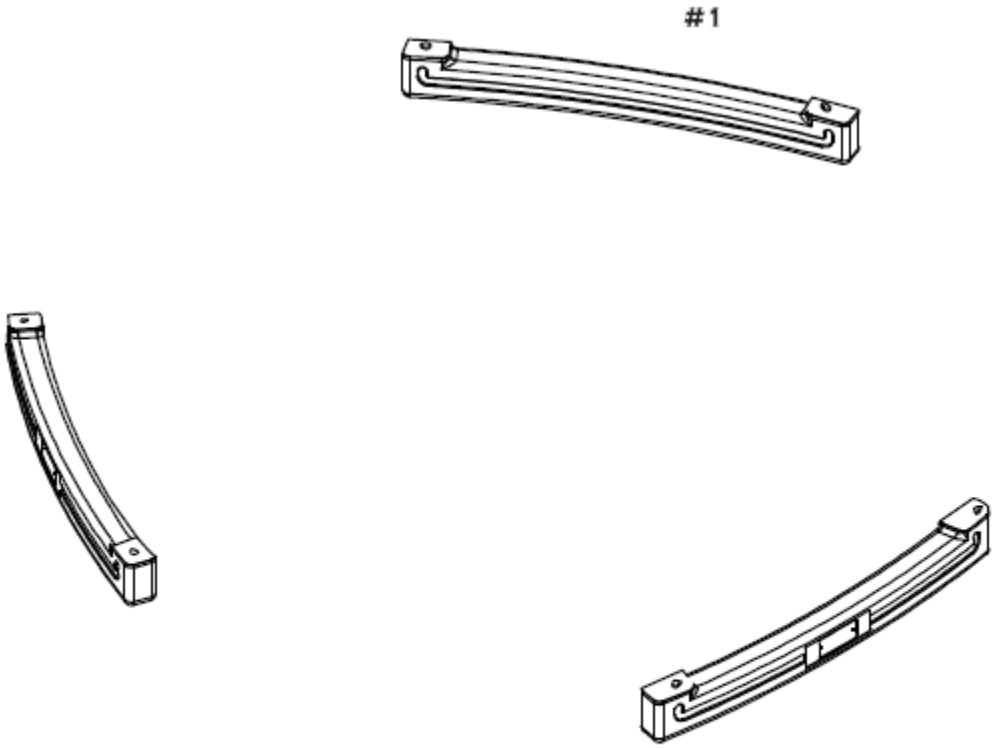

FIGURE 1

STEP 2

Screw Plastic Cap (No.2) onto steel tube (No.3), and insert it through Plastic Base (No.1) and Plastic Cube (No.4) as shown in Figure 2.

Repeat the same process for all 3 Trampoline Leg Bases.

Note: Attach only 1/3 of the Plastic Cap (No.2) onto the steel tube (No.3).

Please do not tighten the plastic Cap (No.2) until after Step 9.

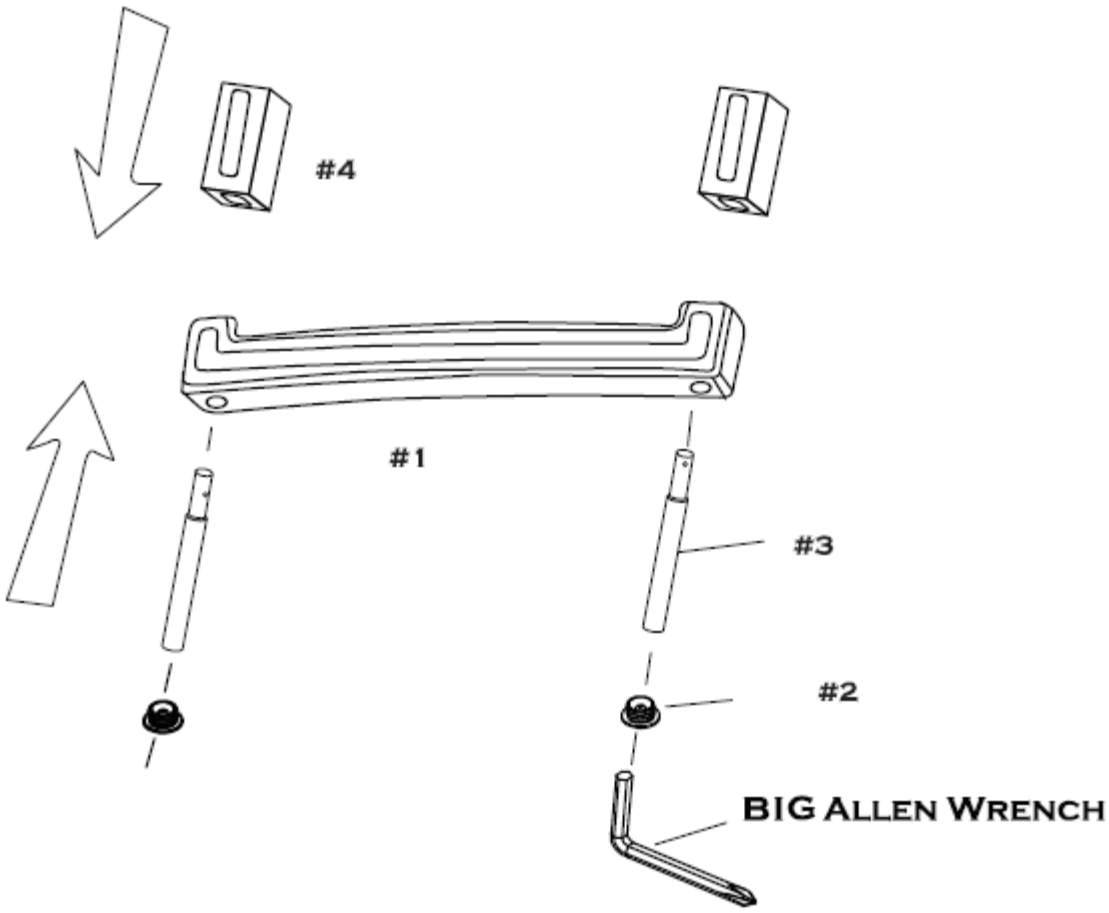

FIGURE 2

STEP 3
Assemble the Trampoline Frame as shown in Figure 3 in the following order:

- Attach the 2 steel corners with “U” Shape Plates (No.5 and No.6) to the Trampoline Leg Bases that will be used for connection to the Swing set. Make sure the “U” Shaped Plates are facing inward.
- Attach the 4 other Steel Corners (No.8) to the remaining Trampoline Legs.
- Connect the 3 Shorter Steel Tubes (No.7) to the inner part of the Trampoline Leg Bases.
- Connect the 3 Longer Steel Tubes (No.9) between the Leg Bases to complete the Trampoline Frame.

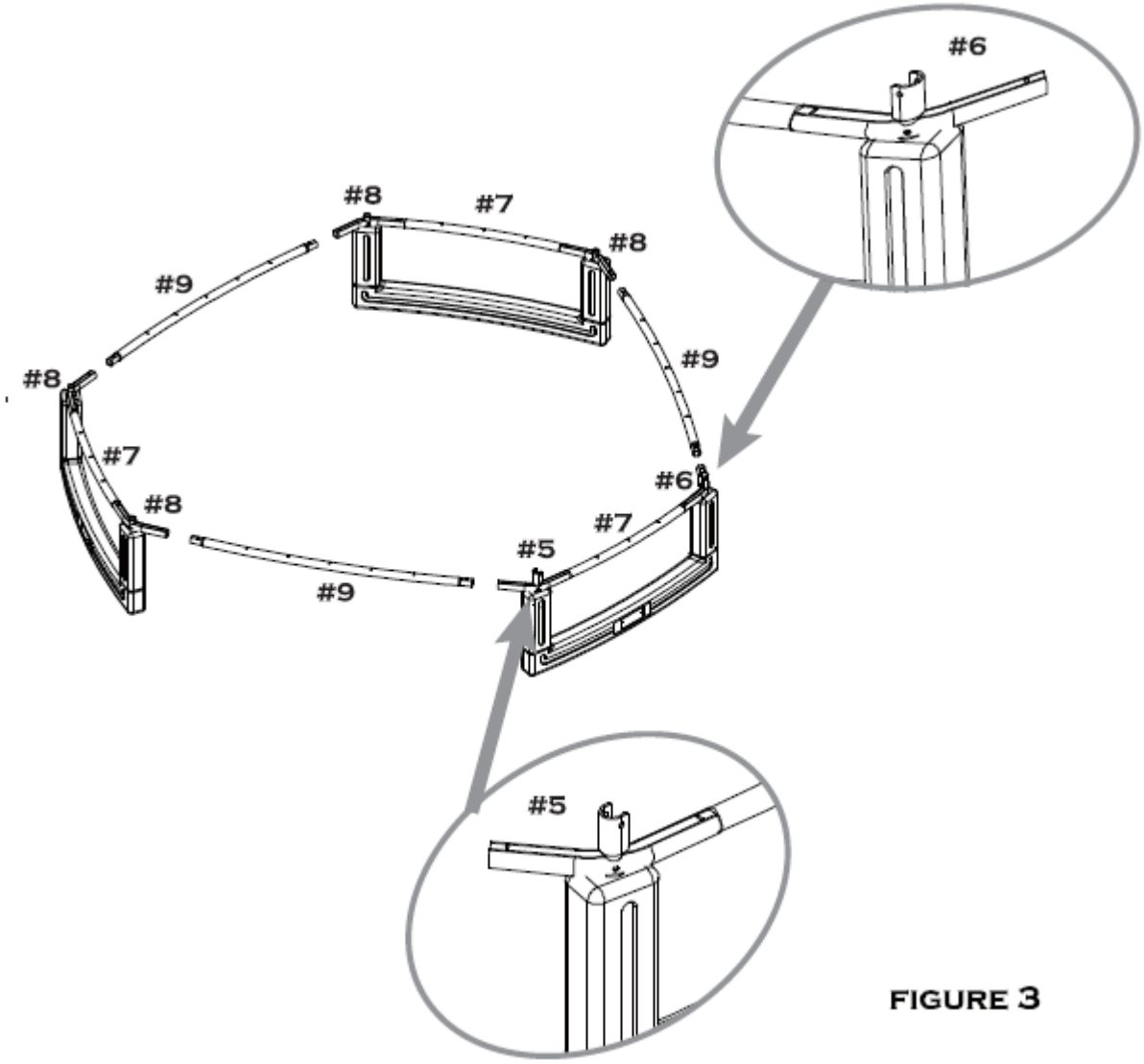

FIGURE 3

STEP4

Place The Trampoline Mat (No. A) on the ground in the center of the Trampoline Frame as shown in Figure 4.

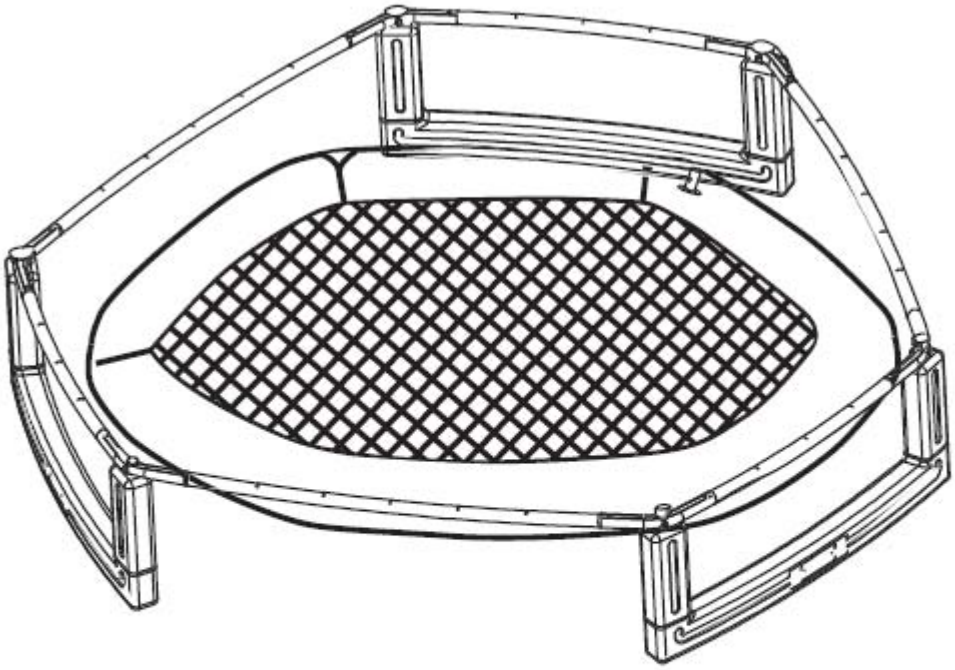

FIGURE 4

STEP 5

Next, you will need to connect the 36 Springs to the Trampoline Mat and Frame. To connect the Springs, latch one end of the Spring (No.10) to the loop stitched on the Trampoline Mat, and then using the Spring Loading Tool provided, pull the other end of the Spring and lock it securely into the hole on Trampoline Frame.

Attach the Spring in an alternating manner on the opposite sides of the Trampoline Frame to ensure even distribution of tension of the Springs, starting with the corner frames, EG, install 1, 36, then 17, 18, 12, 13, 29, 30, 5, 6 and 24, 25.

Next, install the remaining Springs, EG 3, 21, 9, 27, 15, 33. Refer to Figure 5 for reference.

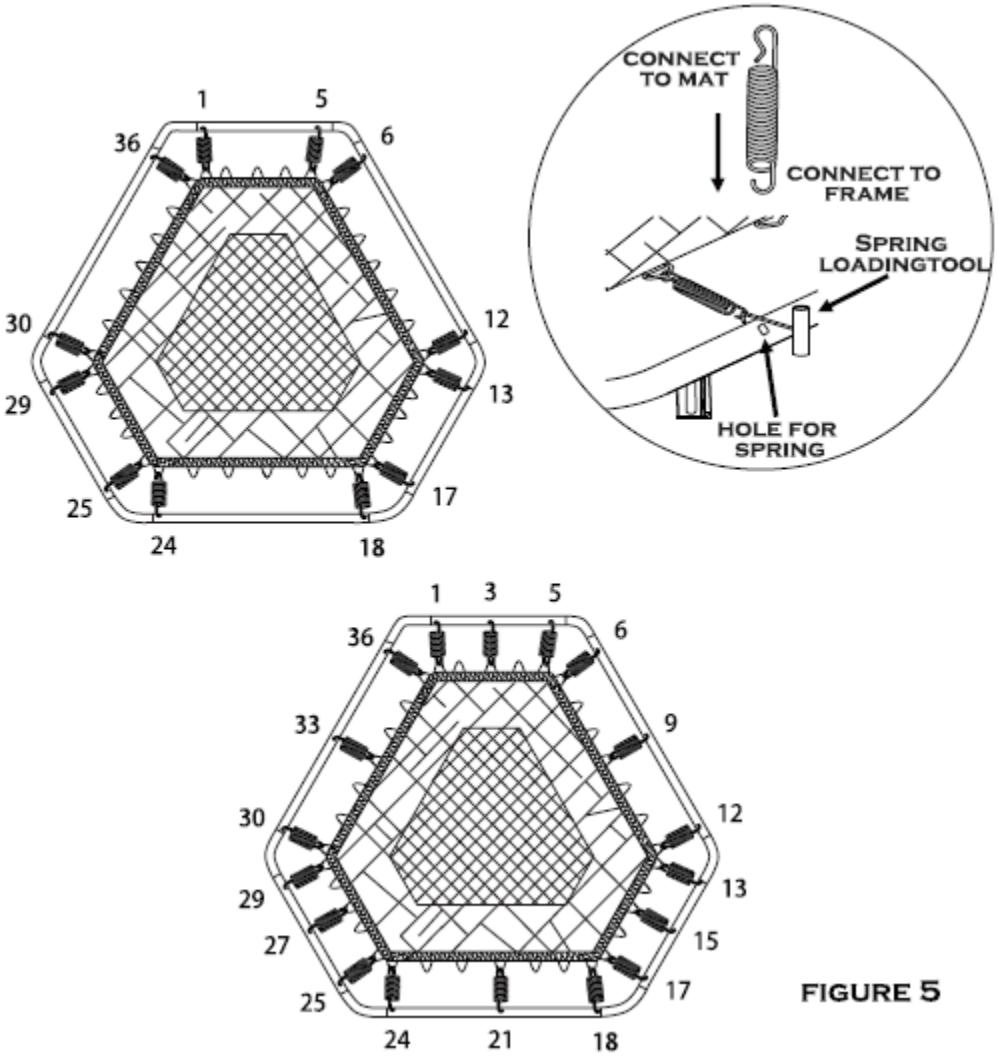

FIGURE 5

STEP 6

Loop the straps on the Trampoline Mat over the steel tubes as shown in Figure 6.

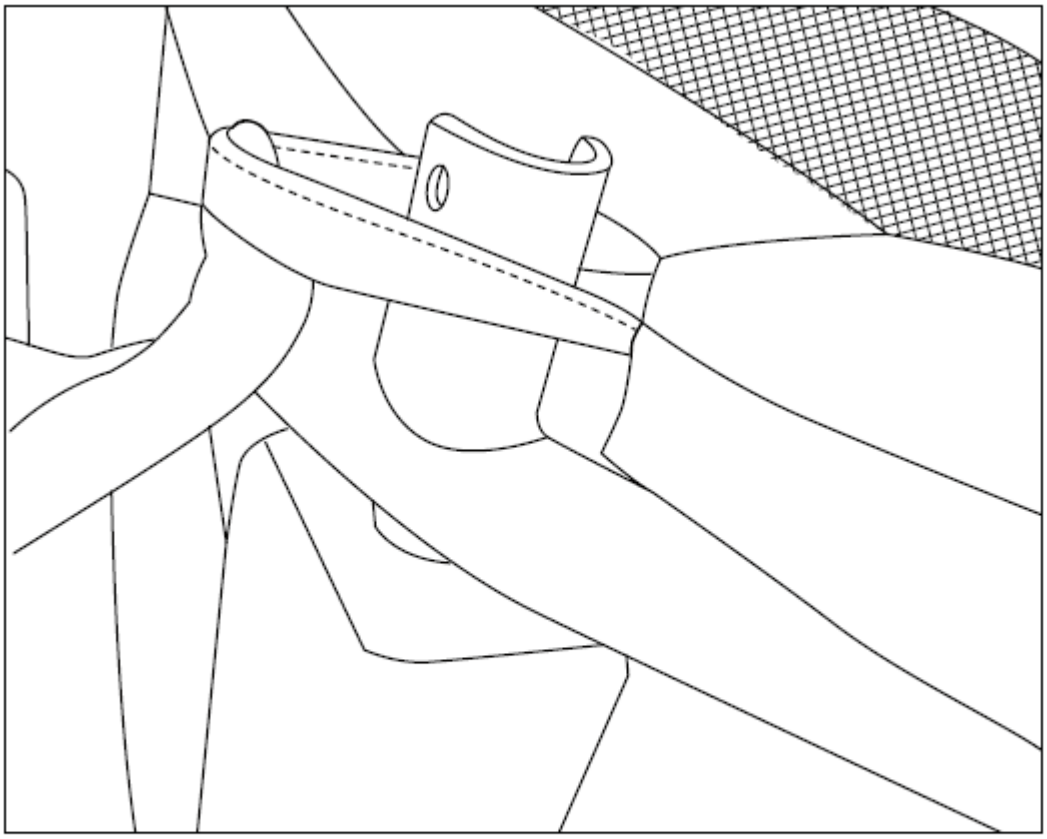

FIGURE 6

STEP 7

Tie the straps to the springs as shown in Figure 7.

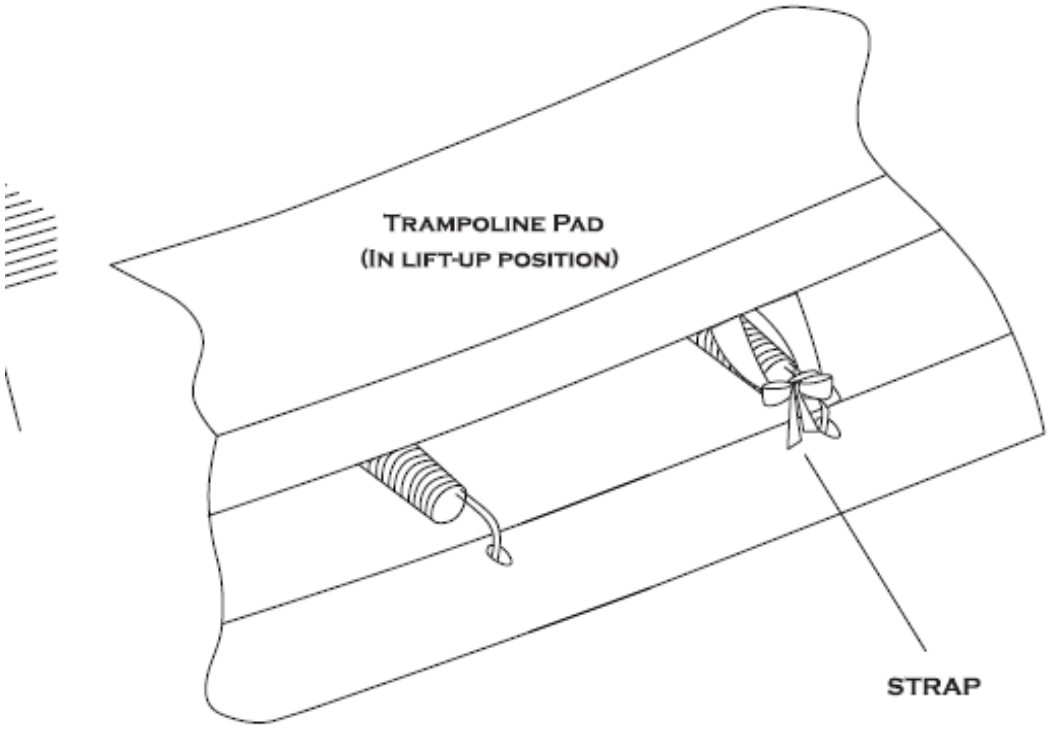

FIGURE 7

STEP 8

Connect No.11 to No.12A and 12B using S5. Then connect the 2 assembled Arched Poles, with Arches facing Inward, to Steel Corners with “U” Shape Plates (No.5 and 6), and secure using No.S1 (ON TOP) and No.S2 (ON BOTTOM) as shown in the enlarged diagram.

Note: The Holes located at the top of pole need to face inward for installation of the enclosure frame later.

TIP: It is better to insert the screws from inside the Trampoline Frame towards outside. You may need to slide the foam up to locate the holes, the screws.

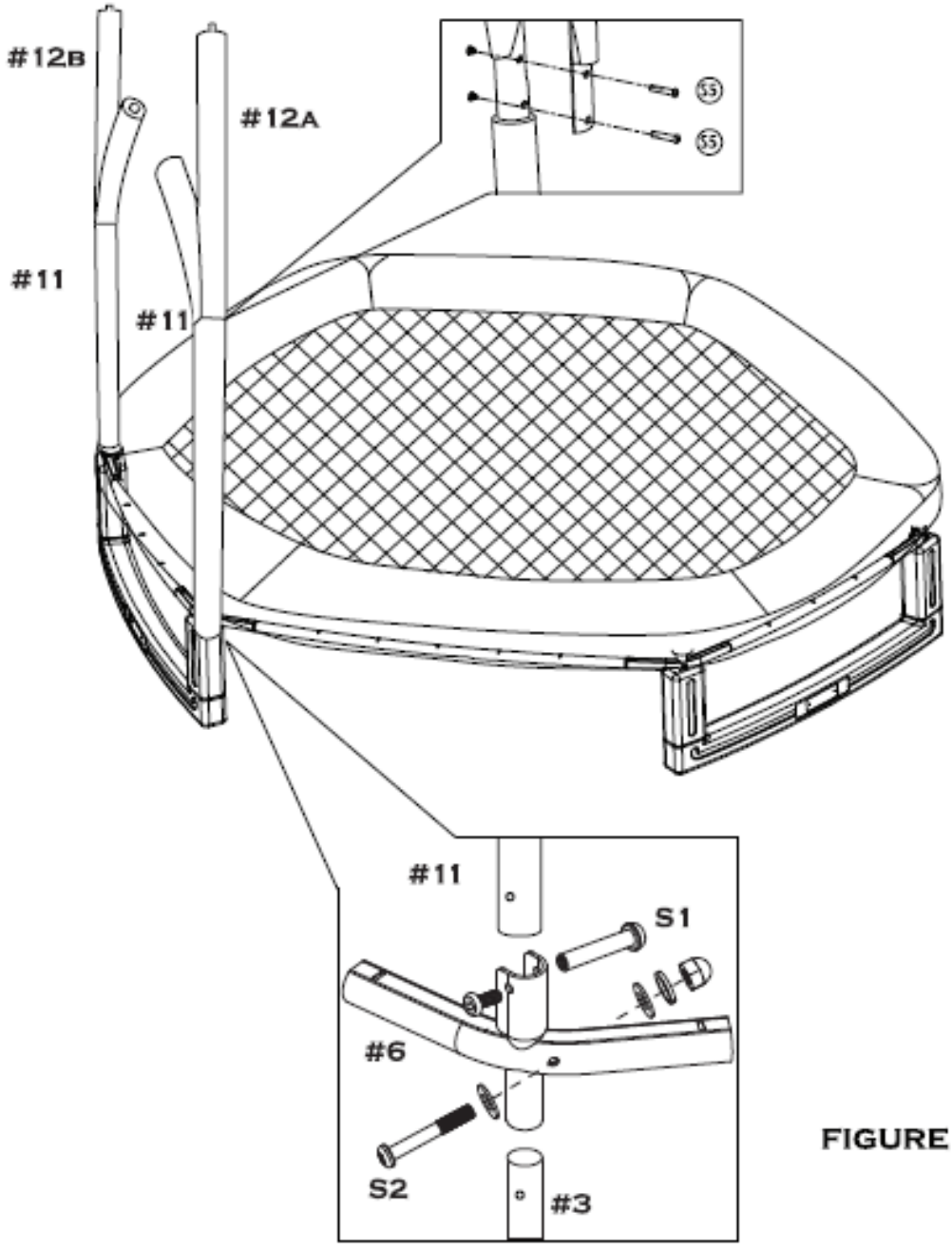

FIGURE 8

STEP 9

Connect the 4 Steel Long Poles (No.13) to the remaining two Trampoline leg Bases using No.S2. The end of pole with larger opening needs to be on the bottom and the holes on the top of the pole must face inward. This will be needed to install the Enclosure Frame later.

TIPS: Insert the screws from inside the Trampoline Frame. Hold the screw head with the wrench while tightening with the Big Allen Wrench.

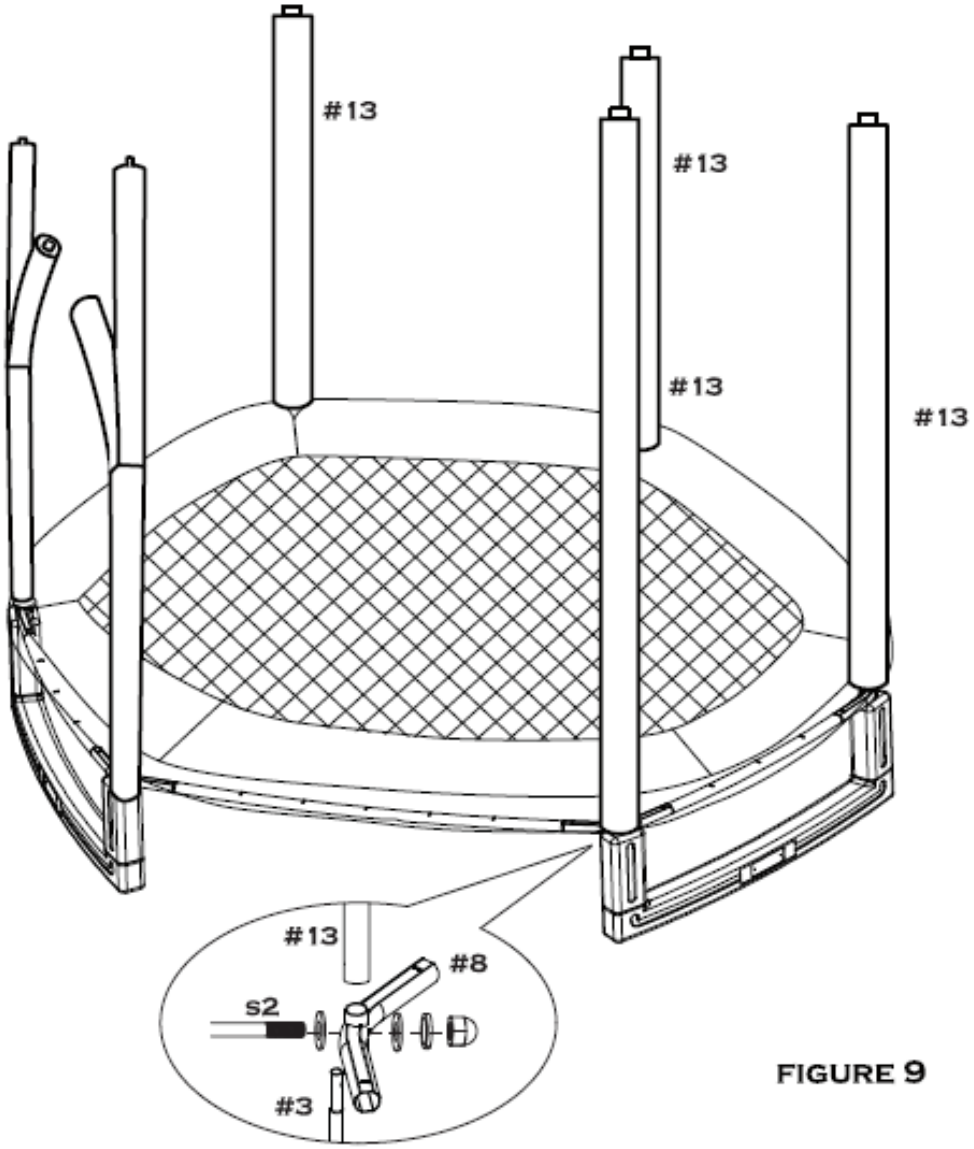

FIGURE 9

STEP 10

Drape the Enclosure (No. B, with the pad on the bottom) over the Trampoline Frame. The opening of the Enclosure must be placed between the 2 arched Steel Poles as shown in Figure 10. The opening is needed for connection to the Swing set later.

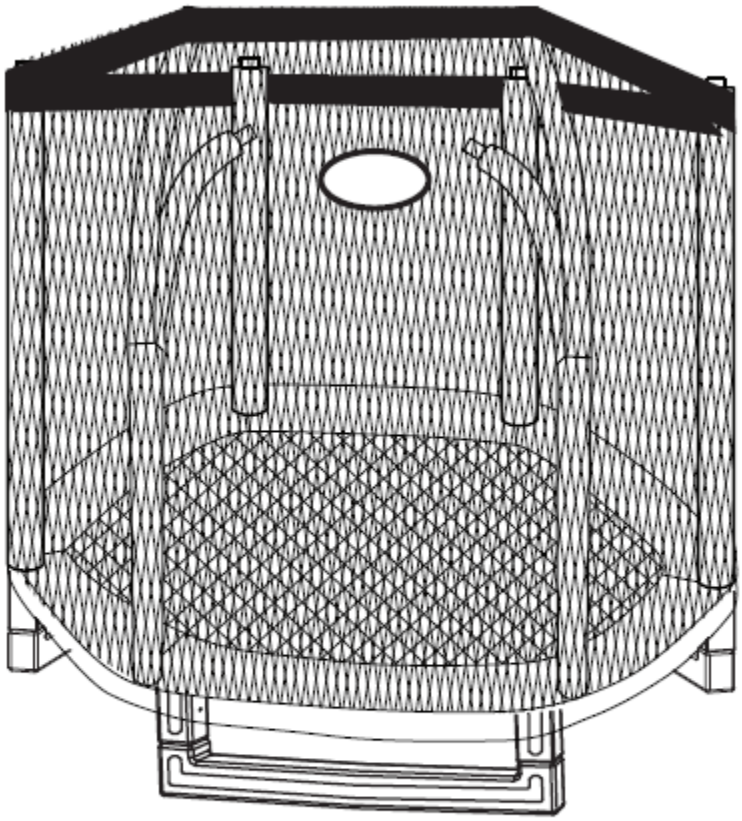

FIGURE 10

STEP 11

Insert 3 Curved Steel Bars (No.14) through the sleeve located at the top of the Enclosure as shown in Figure 11. The Holes on the curved Steel Bards need to face inward.

TIP: It is easier to install while standing inside the Trampoline (Remove shoes first).

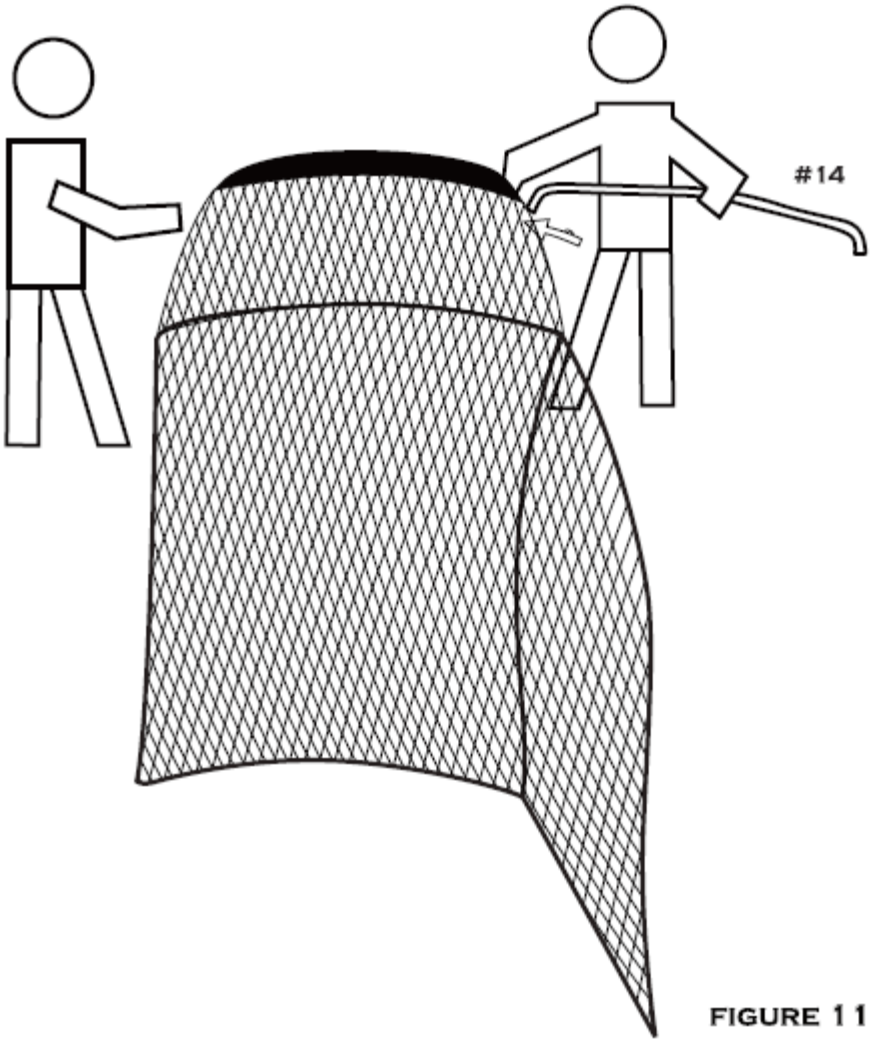

FIGURE 11

STEP 12

Secure the 3 Curved Steel Bars (No.14) to the Steel Poles (No.13) and Arched Steel Poles (No.11, 12) using No.S3.

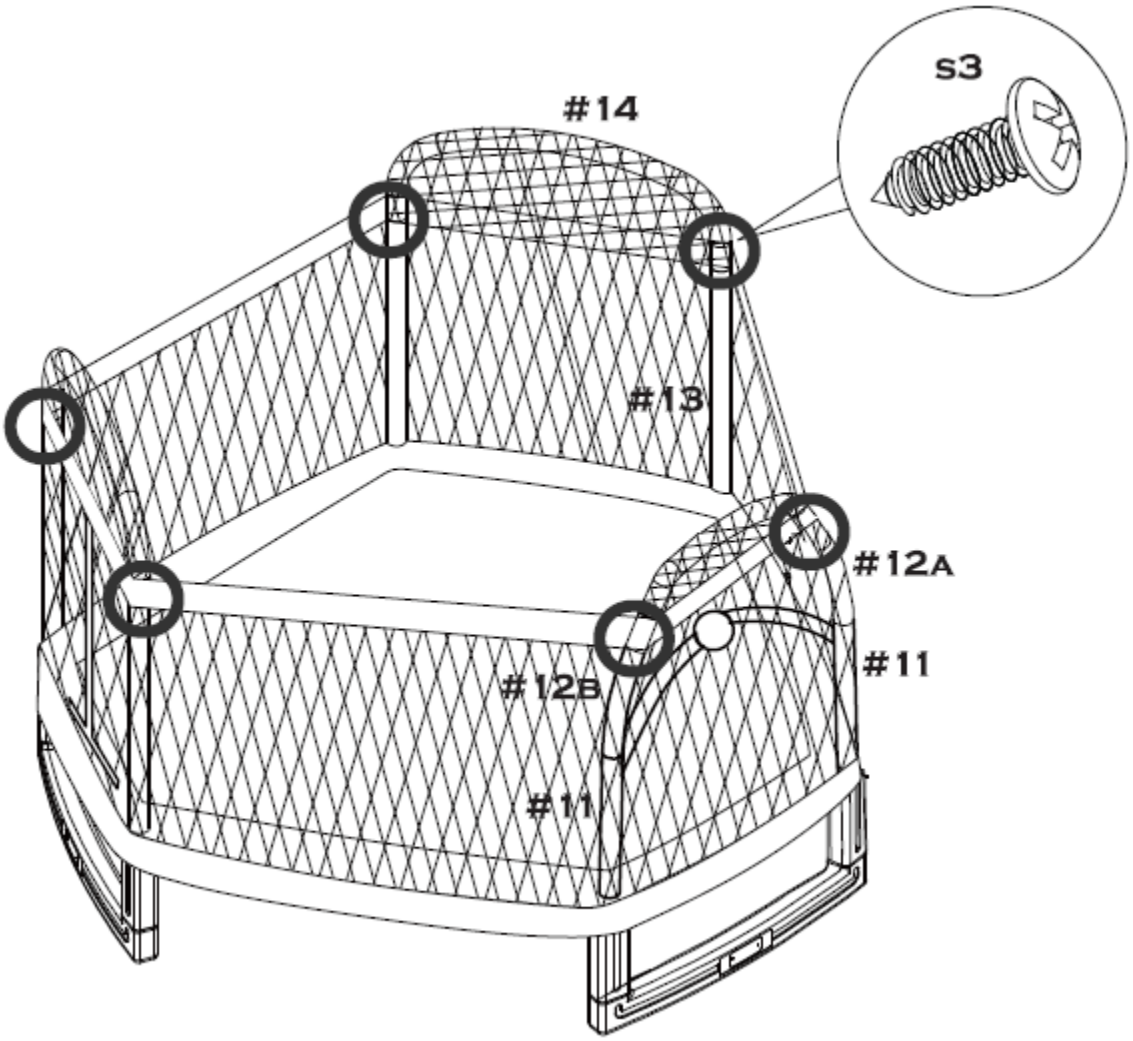

FIGURE 12

STEP 13

Pull the Trampoline Pad and Enclosure to fully cover all exposed steel parts; Tie the straps at the bottom of the Enclosure to the frame.

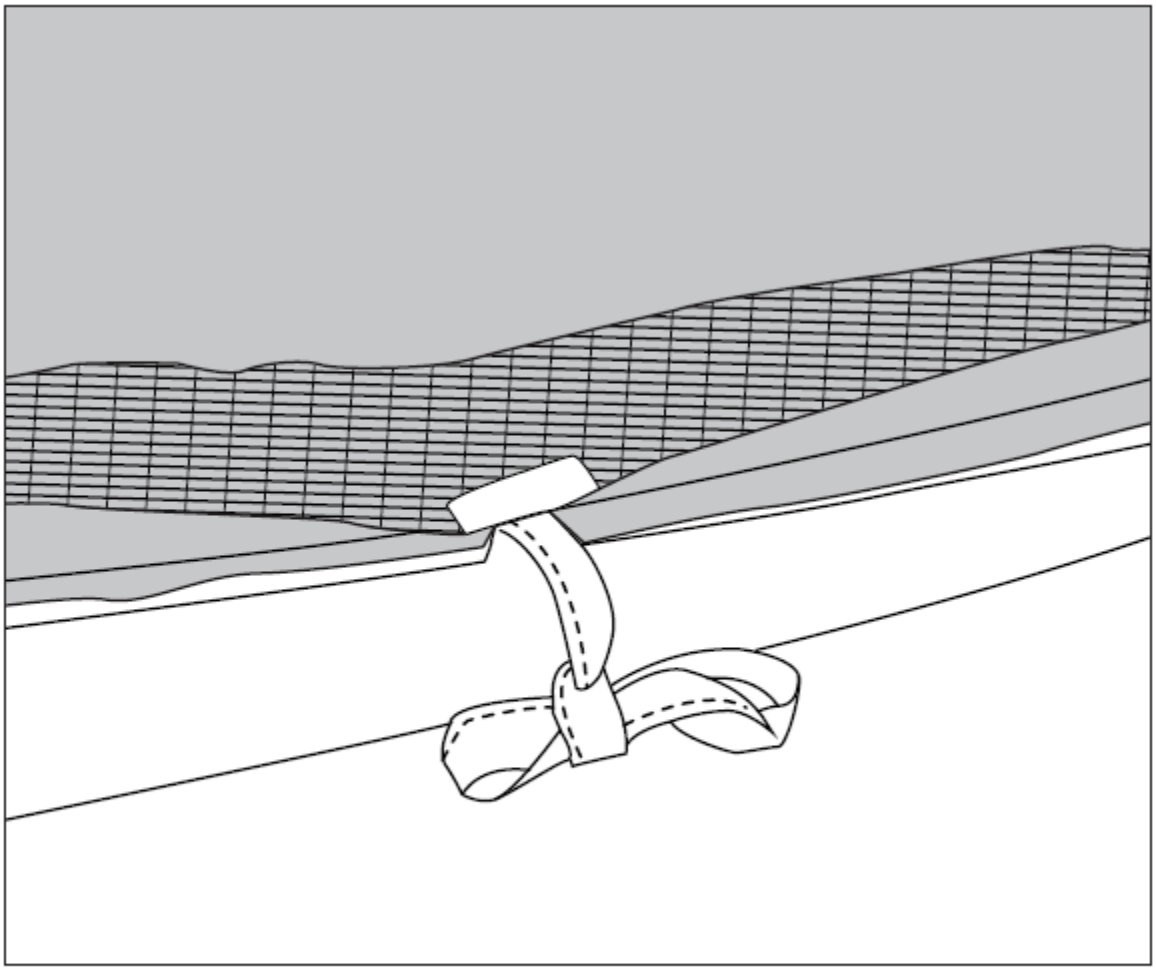

FIGURE 13

INSTALLATION OF THE SWING

STEP 14

Place all parts flat on the ground as shown in Figure 14 and install in the following order:

- Connect steel bars (No.15, No.16) using No.S4.
- Insert steel tubes (No.17) on each side through Plastic Cubes (No.18).

  And the plastic cover (No.19 or No.20) and secure to No.15/16 using No.S4.
- Insert the Lower Curved Tubes (No.21) through the Plastic cover (No.19 or No.20) and secure using No.S5 (Please note No.S6 Black Caps must be placed into the holes on each side before installing No.S5).

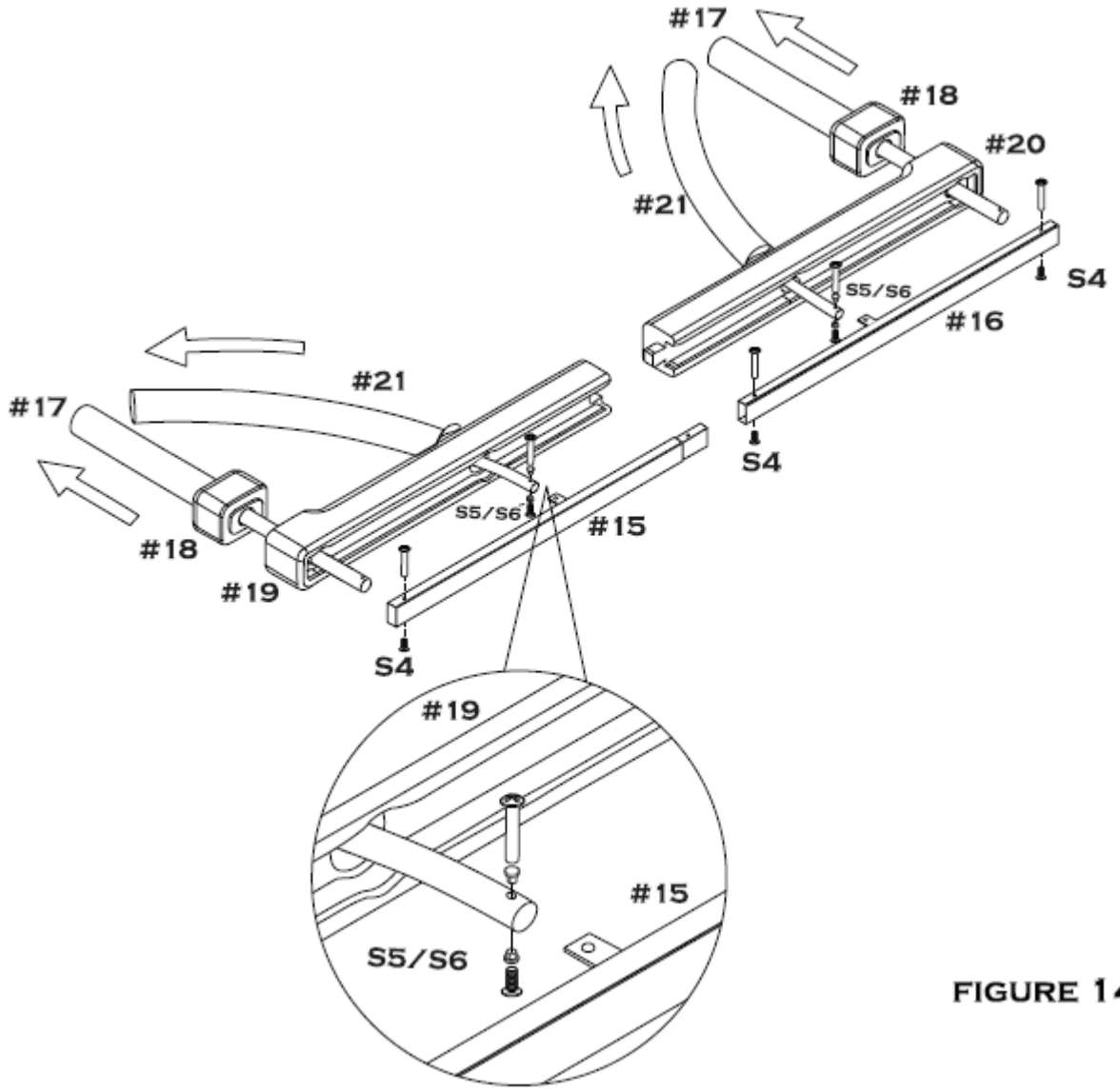

FIGURE 14

STEP 15

Lift the swing support installed in the previous step to a standing position and assemble as follows:

- Connect 2 Upper Curved Tubes (No.22) to Steel Tubes (No.17) using No.S7.
- Connect Lower Curved Tubes (No.21) to Upper Curved Tubes (No.22) using No.S5/S6 (Please note No.S6 black caps must be placed into the holes on each side before installing No.S5).

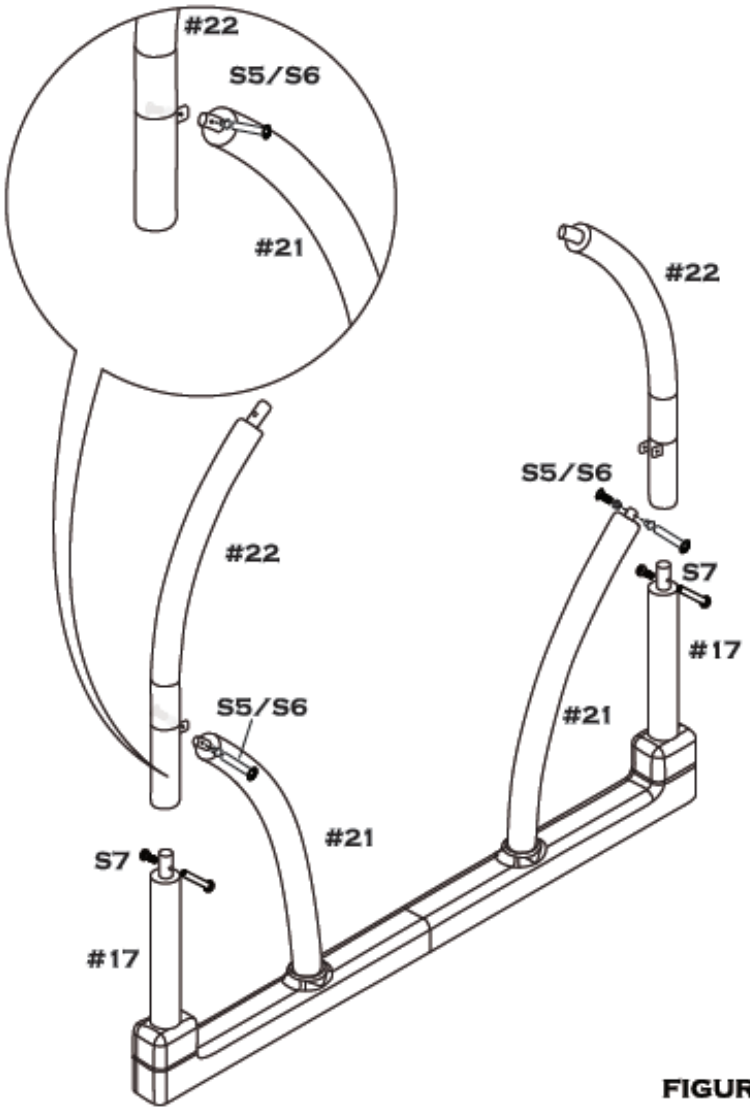

FIGURE 15

STEP 16

Insert the" shorter ends of “U” shaped Swing Support Bars (No.23, No.24) through the hole in the enclosure net and connect to Arched Steel Poles using No.S7 in the manner shown in Figure 16.

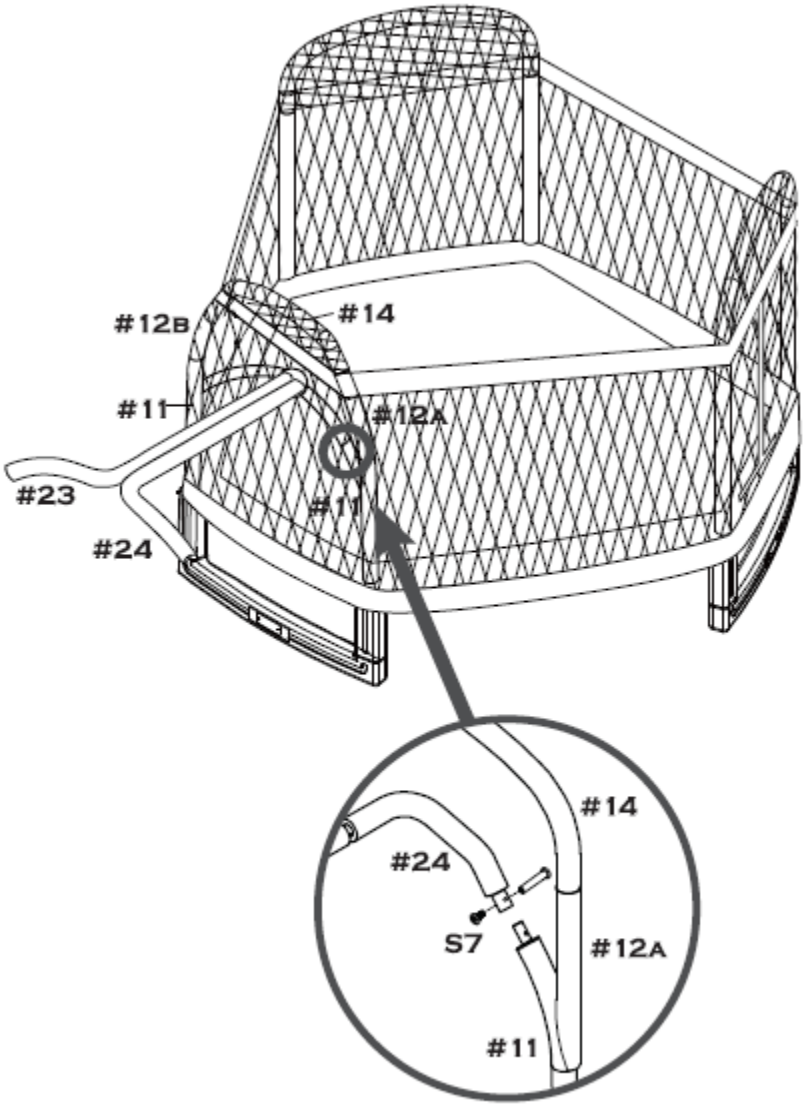

FIGURE 16

STEP 17

Attach the longer end of “U” Shaped Swing Support Bars (No.23, No.24) to upper curved tube (No.22) and secure all connections using No.S7 as shown in Figure 17.

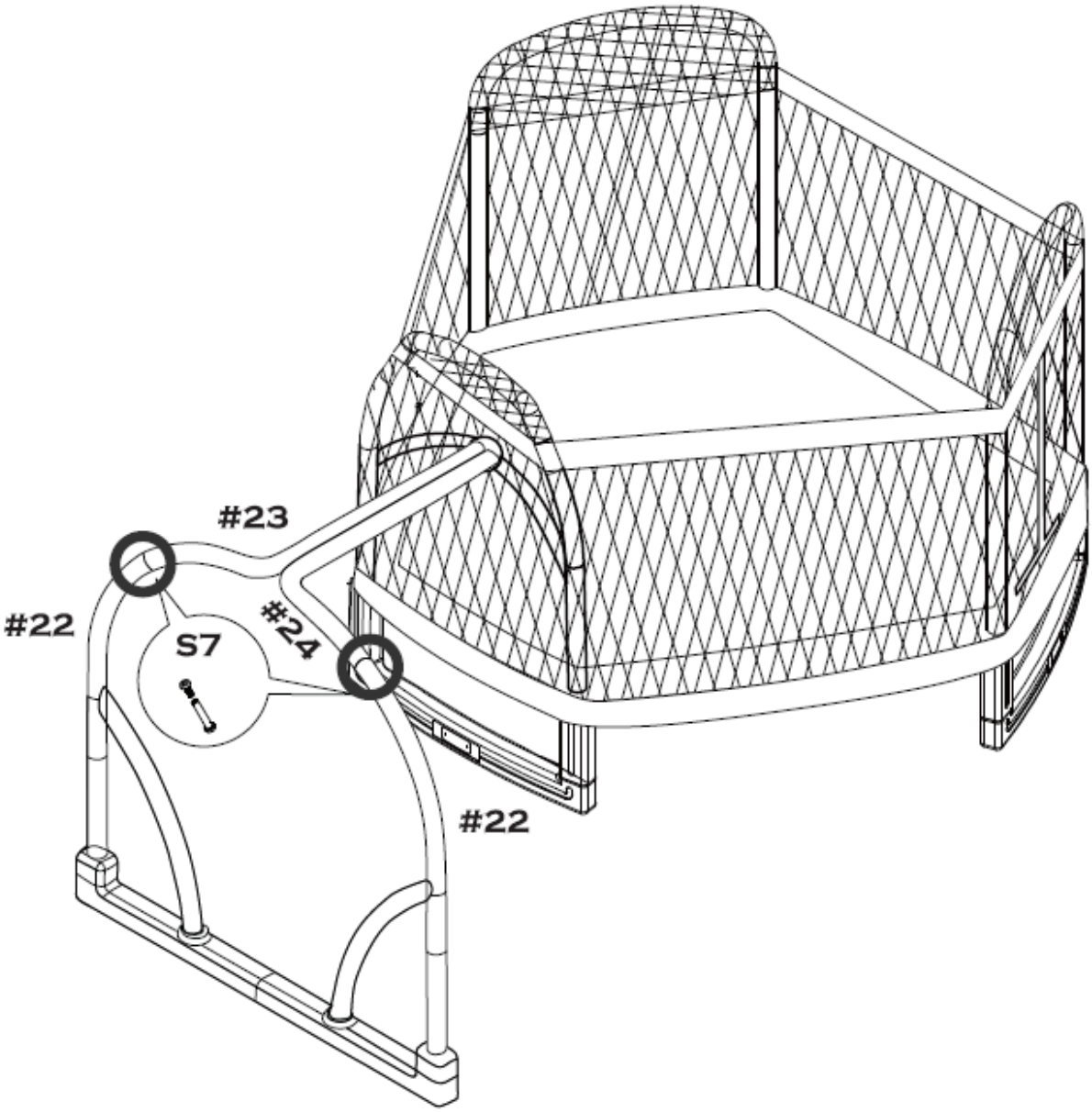

FIGURE 17

STEP 18

Connect the Swing as shown in Figure 18 below. After installing S8, then S9 as shown, snap Plastic Caps No.26 together over the hardware.

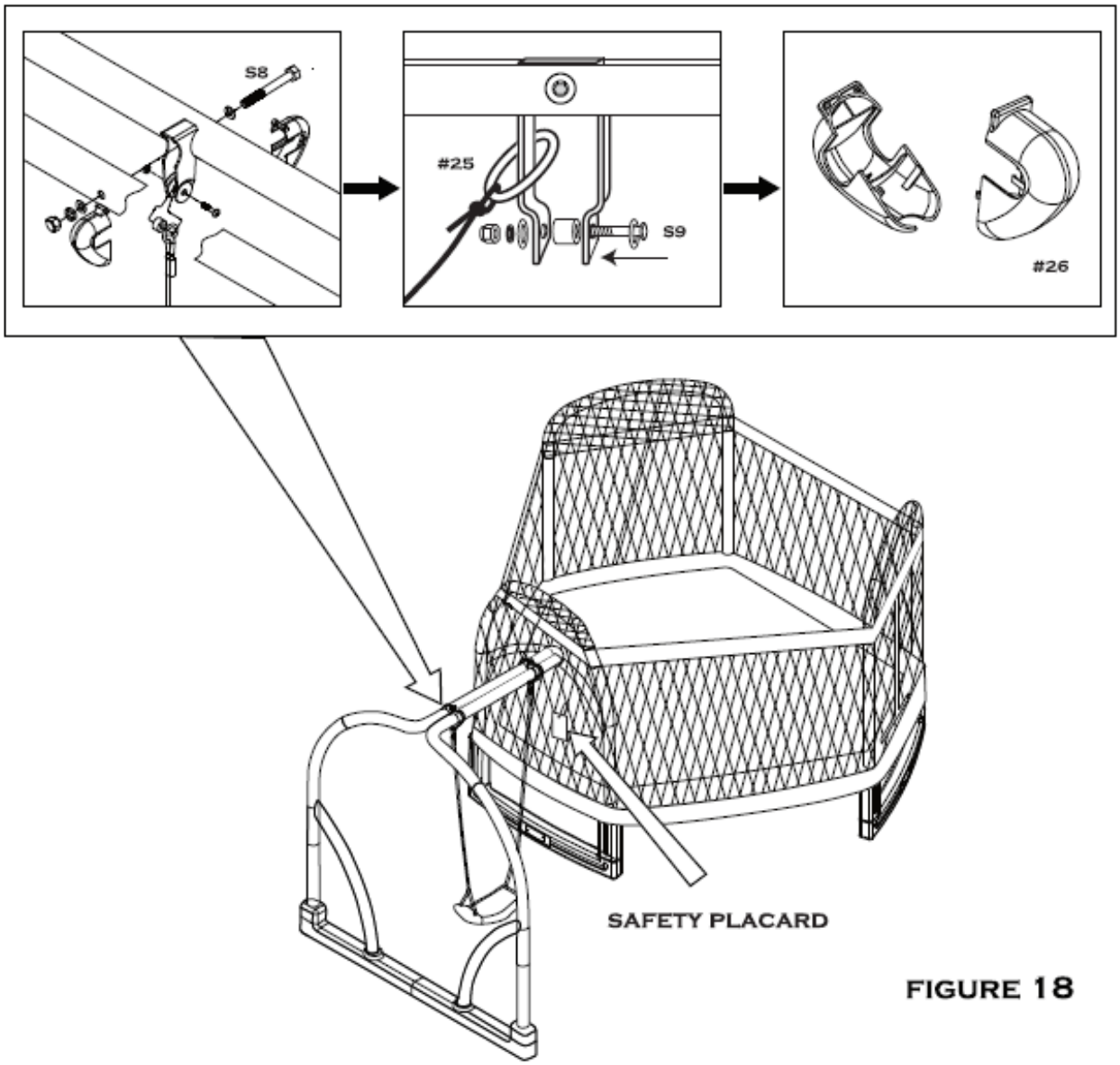

FIGURE 18

Carefully inspect the entire product to ensure all screws are secured and fastened.

Proper Use Instructions

Read and understand the use instructions in this manual prior to using this product. Failure to do so can result in serious injury or death. •

Responsibilities of the user

The key here is to stay in control of your jumps. DO NOT move onto more complicated, more difficult maneuvers until you have mastered the basic, fundamental bounce. Read, understand, and practice all precautions and warnings prior to using the trampoline. A controlled jump is when you land and take off from the same location. For additional tips and instructions, contact a certified trampoline instructor.

Supervisor's or owner's role in preventing injuries

It is the responsibility of the supervisor(s) of the trampoline and swing set users to provide knowledgeable and mature supervision. They need to know and enforce all the rules and warnings set forth in this manual in order to minimize the likelihood of accidents and injuries and to inform users of these rules. During the periods of time when supervision is unavailable or inadequate, the trampoline and swing set should be disassembled and stored in a secure place to prevent unauthorized use. The supervisor is also responsible to ensure that the safety placard is placed on the trampoline and that the jumpers are informed of these warnings and instructions.

All jumpers need to be supervised, regardless of skill level or age.

- DO NOT attempt or allow somersaults. Landing on the head or neck can cause serious injury, paralysis or death, even when landing in the middle of the mat.
- Do not allow more than one person on the trampoline or swing. Use by more than one person on the trampoline at the same time can result in serious injuries.
- Wear clothing free of drawstrings, hooks, loops or anything that could get caught while using the trampoline and swing set and result in entanglement or strangulation, or both.
- Climb on and off the trampoline. It is a dangerous practice to jump from the trampoline to the floor or ground when dismounting, or to jump onto the trampoline when mounting. Do not use the trampoline as a springboard to other objects.
- Keep enclosure tightly fastened to the trampoline in accordance with the manufacturer's instructions. Failure to properly assemble and maintain a tight, secure trampoline/enclosure boundary may result in serious injury, strangulation or death.
- Completely close the opening of the enclosure before jumping. Close the opening of the enclosure after using the trampoline.
- Do not attempt to jump over the enclosure barrier.
- Do not intentionally rebound off the enclosure barrier.

Read and understand the use instructions in this manual prior to using this product. Failure to do so can result in serious injury or death. •

WARNING

- Read all instructions before using the trampoline and swing set. Warnings and instructions for the care, maintenance and use of this trampoline and swing set are included to promote proper and enjoyable use of this equipment.
- Inspect the trampoline and swing set before each use. Make sure the frame padding, enclosure and the enclosure support (frame) padding is correctly and securely positioned. Replace any worn, defective or missing parts before using.
- Use trampoline and swing set only with mature, knowledgeable supervision.
- Check for loose cords and gaps. Users may become entangled in or strangled by loose cords or in gaps between trampoline and enclosure.
- Use trampoline only when the surface of the mat is dry. Wind or air movement should be calm to gentle. The trampoline must not be used in gusty or severe winds.
- Keep objects away which could interfere with the jumper. Maintain a clear area under, above, and around the trampoline.
- Do not attempt to crawl under the barrier.
- Do not hang from, kick, cut or climb on the barrier.
- Do not attach anything to the barrier that is not a manufacturer-approved accessory or part of the enclosure system.
- Enter and exit the enclosure only at the enclosure door.
- Learn fundamental bounces and body positions thoroughly before trying more advanced skills. A variety of trampoline activities can be carried out by performing the basic fundamentals in various series and combinations, performing one fundamental after another, with or without feet bounces between them.
- Stop bounce by flexing knees as feet come into contact with the trampoline mat. Learn this skill before attempting others.
- Avoid bouncing too high. Stay low until bounce control and repeated landing in the center of the trampoline can be accomplished. Control is more important than height while keeping the head erect, focus eyes on the trampoline toward the perimeter. This will help control the bounce.
- Avoid bouncing when tired. Keep turns short.
- Limit the time of continuous usage. Make regular stops. Do not jump when tired.
- Properly secure the trampoline when not in use. Protect it against unauthorized use.
- For information concerning skill training, contact a certified trampoline instructor.
- For additional information concerning the trampoline equipment, contact the manufacturer.

Learning the fundamental trampoline skills

The following lessons are suggested for you to learn basic steps and bounces. Before using the trampoline, you should read and understand all warnings. A complete discussion and demonstration of body mechanics and trampoline guidelines should occur between the supervisor and student as well. The bounces are diagrammed on the following page.

Lesson 1

A. Mounting and Dismounting – Demonstration of proper techniques
B. The Basic Bounce – Demonstration and practice
C. Braking (Check the Bounce – Demonstration) and practice. Learn to brake on command
D. Hands and Knees Bounce – Demonstration and practice. Stress should be on four-point landing and alignment

Lesson 2

A. Review and practice of techniques learned in Lesson 1
B. Knee Bounce – Demonstration and practice. Learn the basic down to knee and back up before trying half twist to left and right
C. Seat Bounce – Demonstration and practice. Learn basic seat bounce then add a knee bounce, hands and knees repeat

Lesson 3

A. Review and practice skills and techniques learned in previous lessons
B. Front Drop – To avoid mat burns and teach the front bounce position, all students should be requested to assume the prone position (face down on the ground) while the instructor checks for faulty positions that could cause injury
C. Start with a Hands and Knees bounce and then extend body into prone position and on the mat and return to feet
D. Practice Routine – Hands and Knees Bounce, Front Bounce, return to feet, Seat Bounce, return to feet, Seat Bounce, return to feet

Lesson 4

A. Review and practice skills and techniques learned in previous lessons
B. Half – Turn
    i. Start from front drop position and as you make contact with mat, push off with arms in either the right or left direction and turn head and shoulders in same direction
    ii. During turn, be sure to keep back parallel to mat and head up
    iii. After completing turn, land in the Front Drop position

After completing this lesson, the student now has a basic foundation of trampoline bounces. Jumpers should be encouraged to try and develop their own routines with the emphasis on control and form.

A game that can be played in order to encourage students to try developing routines is “BOUNCE”. In this game, players count off from 1 to X. Player one starts with a maneuver. Player two has to do Player one’s maneuver and add on another. Each player must do the routine properly in the correct sequence. The first person to miss receives the letter “B”. This continues until someone spells out the word “BOUNCE”. The last remaining contestant is deemed the winner! Even when playing this game, it is important to perform your routines under control and not try difficult or highly skilled bounces that you have not yet mastered.

A certified trampoline instructor should be contacted to further develop your trampoline skills.

BASIC TRAMPOLINE BOUNCES

THE BASIC BOUNCE

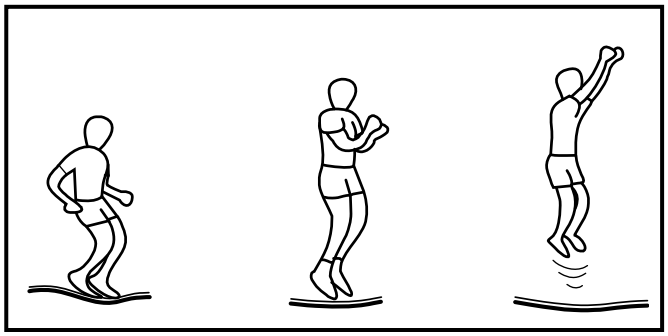

1. Start from the standing position, with your feet having shoulder width apart and with head up and eyes on mat
2. Swing arms forward and up in a circular motion
3. Bring feet together while in mid-air and point toes downwards.
4. Keep the feet shoulder width apart when landing on mat

THE KNEE BOUNCE

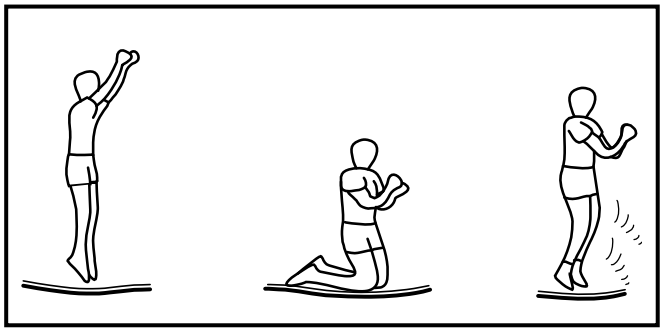

1. Start with the basic bounce and keep it low
2. Land on knees while keeping your back straight and body erect while using your arms to maintain balance
3. Bounce back to basic bounce position by swinging arms up

THE SEAT BOUNCE

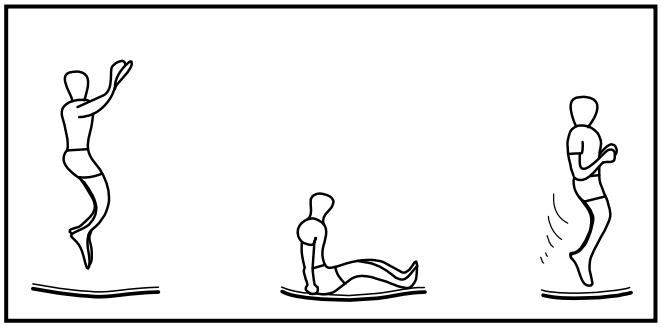

1. Land in a flat sitting position
2. Place hands on mat besides hips, but do not lock your elbow
3. Return to erect position by pushing with hands

THE 180 DEGREE BOUNCE

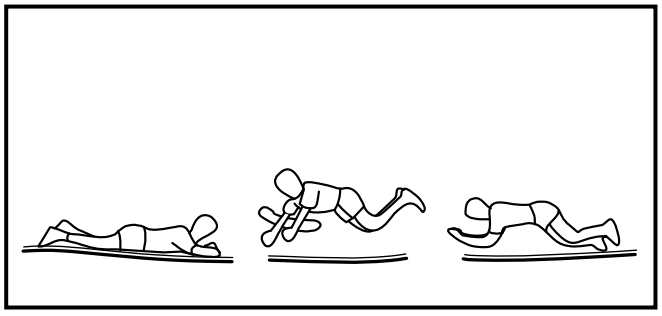

1. Start with the Front Bounce position
2. Push off with left or right hands and arms (depending on which way you wish to turn)
3. Maintain head and shoulders in the same direction while keeping your back parallel to the mat and your head up
4. Land in the Prone position and return to standing position

Product Warranty

Dyaco Canada Inc. warrants this unit, to the original purchaser, to be free from defects in material and workmanship for the period of time listed below. Warranty time begins at the time of purchase. Normal wear and user's abuse are not covered in the warranty. Weather damage and other such acts of nature are not covered by the Manufacturer's warranty. Commercial use and/or transfer of ownership voids the warranty.

Trampoline and Swing

Frame	1 Year
Other components	90 days

For warranty service contact our Customer Service Dept.:
1-888-707-1880 (toll free), Monday-Friday 8:30 A.M. to 5:00 P.M. Eastern Standard Time

LIABILITY

While every attempt is made to embody the highest degree of safety in all equipment we cannot, however, guarantee freedom from injury. The user assumes all risk of injury due to use. All merchandise is sold on this condition, that no representative of the Company can waive or change. This equipment is intended for residential use only. This equipment is not to be used in places of public assembly such as schools, nurseries, day care centers, churches and parks. Dyaco Canada Inc. cannot assume any liability for such use. Any commercial, institutional or public use of this equipment will void the warranty.

PLEASE NOTE: ANY REPAIRS OR REPLACEMENTS MUST BE MADE USING AUTHORIZED ORIGINAL MANUFACTURER PARTS IN ORDER FOR THIS WARRANTY TO BE VALID.

DO NOT RETURN PRODUCT TO THE STORE. PLEASE CONTACT OUR CUSTOMER SERVICE FOR PARTS OR ASSEMBLY INSTRUCTIONS. STORES ARE NOT EQUIPPED TO PROVIDE CUSTOMER SERVICE FOR THIS PRODUCT.

Please visit us online for information about our other brands and products manufactured and distributed by Dyaco Canada Inc.

www.dyaco.ca

www.dyaco.ca

www.dyaco.ca

www.dyaco.ca

www.spiritfitnesscanada.ca
www.dyaco.ca

www.spiritfitnesscanada.ca
www.dyaco.ca

www.solefitness.ca
www.dyaco.ca

www.trainorsports.ca
www.dyaco.ca

www.xterrafitness.ca
www.dyaco.ca